Description	Material	Finish
Body	Brass	Nickel
Pin	Brass	Gold
Insulation	PTFE	N/A
O-Ring	SI Rubber	Rubber
Crimp ring	Brass	Nickel
Washer	Brass	Nickel
Nut	Brass	Nickel
Heat Shrink	Polyolefin	Black

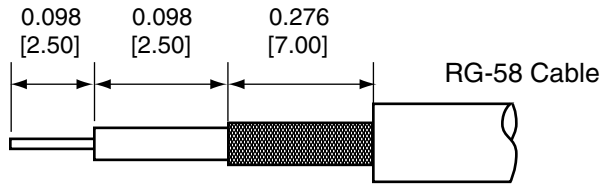

RECOMMENDED CABLE STRIPPING DIMENSIONS

REVISIONS			
REV	DESCRIPTION	DATE	APPV
B	Updated footprint and dimensions; Added new title block	10-JUL-12	SAH

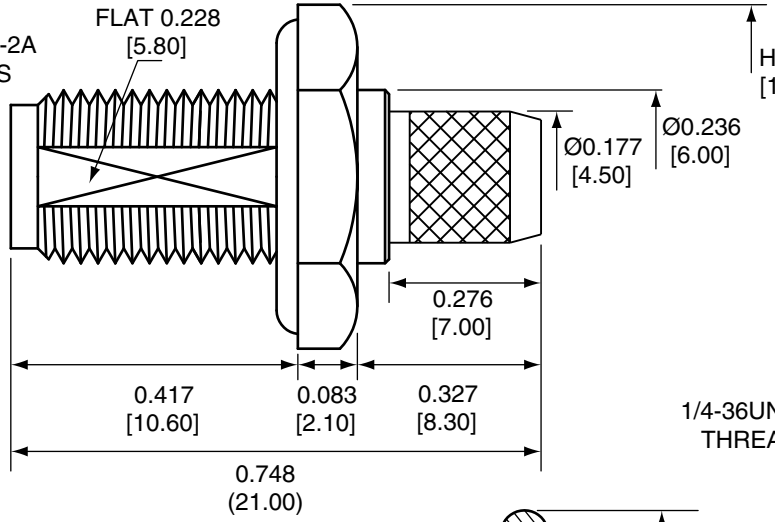

SIDE VIEW

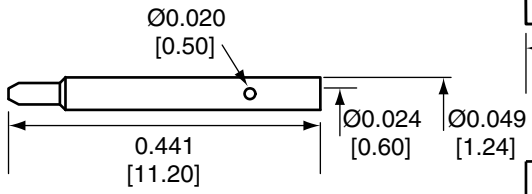

PIN

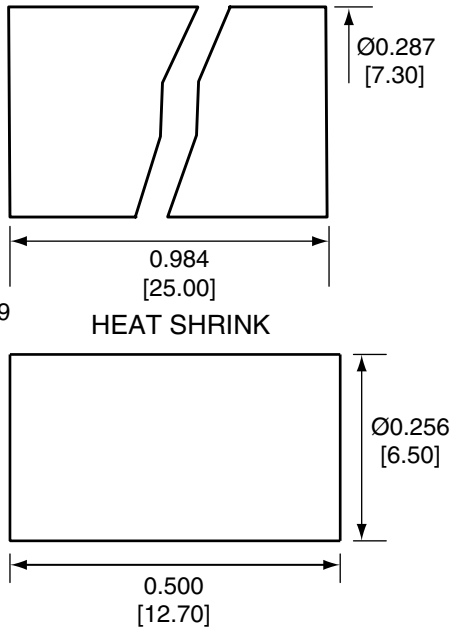

HEAT SHRINK

CRIMP RING

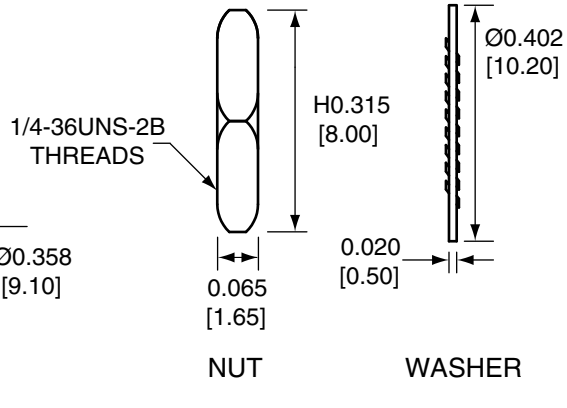

NUT

WASHER

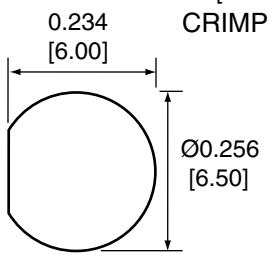

RECOMMENDED
MOUNTING HOLE

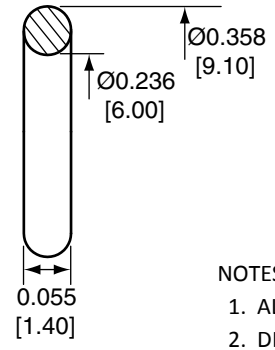

O-RING

NOTES: (UNLESS OTHERWISE SPECIFIED)

1. ALL DIMENSIONS ARE IN INCHES [mm].
2. DIMENSIONS APPLY AFTER FINISHING.
3. MANUFACTURE TO BE COMPLIANT WITH EU RoHS DIRECTIVE.
4. SAFETY BREAK ALL SHARP CORNERS AND EDGES .02 MAXIMUM.

CONSMA014-R58 ASSEMBLY INSTRUCTIONS

1. Strip the cable to recommended dimensions.
2. Slip heat shrink and crimp ring onto stripped cable.
3. Insert o-ring into groove in the nut on body.
4. Solder the pin to the center conductor.
5. Insert the pin, center conductor, and insulation into the body.
6. Wrap the braid around the tail of the body and crimp the ring with 0.213" hex crimp tool (or one labeled for use with RG-58 cable).
7. Use heat shrink to cover crimp.
8. Use the nut and washer to secure the connector to a case. (2.50mm maximum wall thickness)

WARNING: THIS DRAWING CONTAINS PROPRIETARY INFORMATION THAT IS THE SOLE PROPERTY OF LINX TECHNOLOGIES, AND SHALL BE TREATED AS SUCH. NO DISCLOSURE OR REPRODUCTION OF THIS DOCUMENT IS PERMITTED, IN WHOLE OR IN PART, WITHOUT THE EXPRESS WRITTEN PERMISSION OF LINX TECHNOLOGIES OR ITS DESIGNATED AGENTS.

MATERIAL:

FINISH:

TOLERANCES:
.020 [0.50]-.200 [5.00]= ±.008 [0.20]
.200 [5.00]-1.200 [30.00]= ±.016 [0.40]
1.20 [30.0]-4.75 [120.0]= ±.024 [0.60]
4.75 [120.0]-12.40 [315.0]= ±.040 [1.0]

PROJECTION:

ANGLES: ±1°

DRAWN: B.MURPHY DT: 10-JUL-12

ENGR: S.HOGAN DT: 10-JUL-12

Linx
159 ORT LANE
MERLIN, OR 97532

TITLE:
RP-SMA FEMALE BULKHEAD MOUNT CABLE
END CRIMP WITH O-RING FOR RG58 CABLE

SIZE A | DWG. NO. CONREVSMA014-R58 | REV B

SCALE: 2:1 | DO NOT SCALE DRAWING | SHEET 1 OF 1

LDCFDLT_A