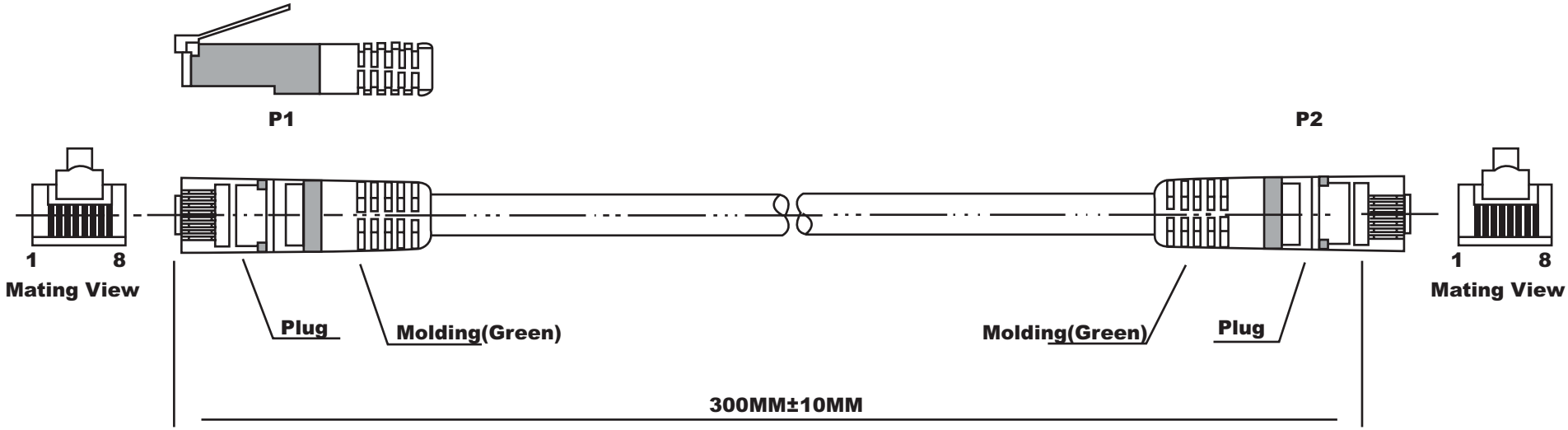

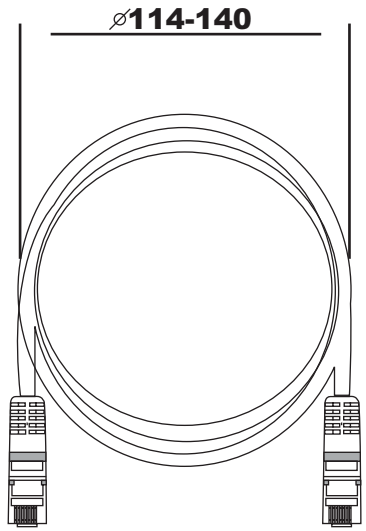

PIN Out			
PA/R	P1(T568B)	Wire	P2(T568B)
1	1	Wht/Org	1
	2	Org	2
2	3	Wht/Grn	4
	6	Grn	5
3	4	Blu	3
	5	Wht/Blu	6
4	7	Wht/Brn	7
	8	Brn	8

Material:

- Wire: FTP STR Cat 5e
- Plug: RJ45+S/R(YUS-01)

Unit: MM±0.10MM

Scale	1:1
TOLERANCE	
X.X	±0.40
X.XX	±0.25
X.XXX	±0.15
Angle	±3°

Modification	Date	Name

		Name
Drawn	12.08.11	Chappell
Approved		

ASSMANN WSW components

RoHS Complaint

Item No.

A-MCKP-80003-R

Title

Cat 5e FTP Crossover Patch Cable - 8P8C, 0.3 Meter

Drawing No.

rev00

Replace

Sheet