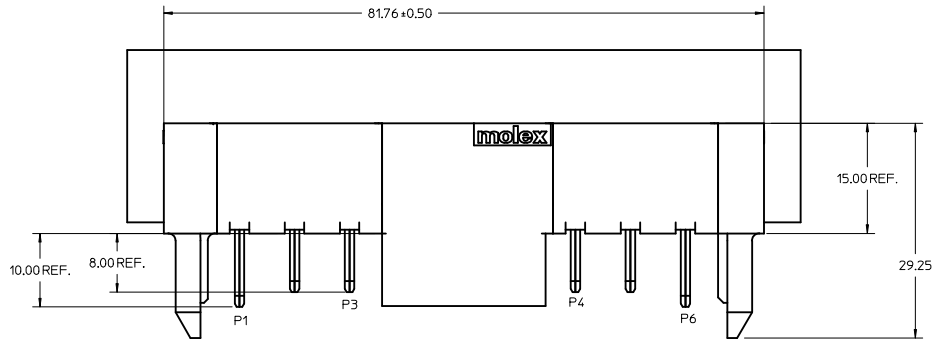

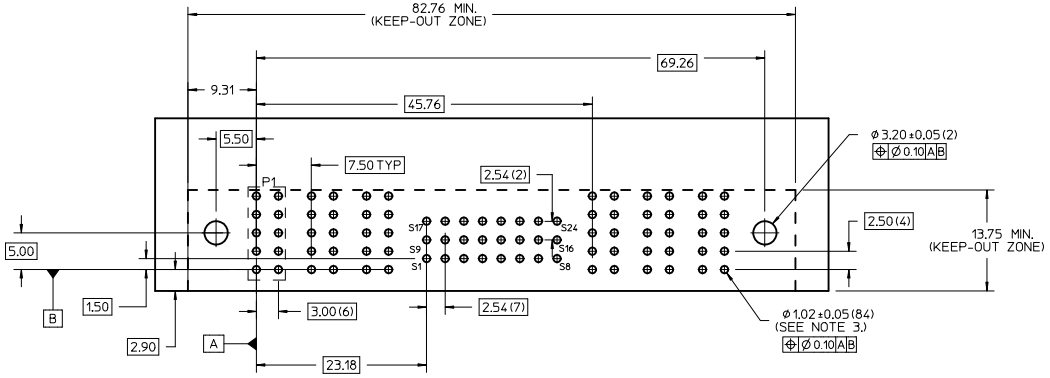

RECOMMENDED PCB LAYOUT AND KEEP-OUT ZONE

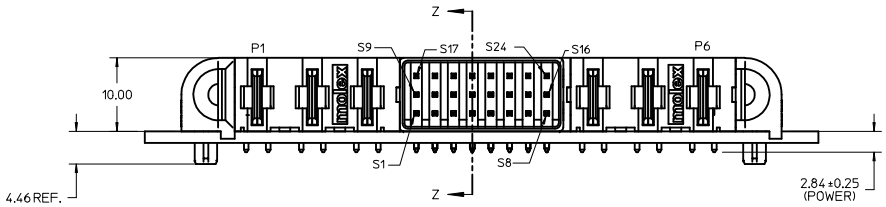

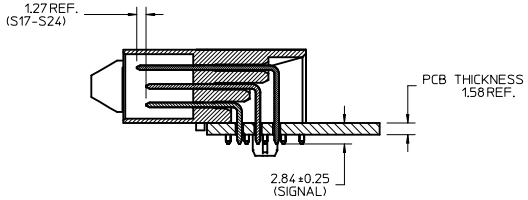

SECTION Z-Z

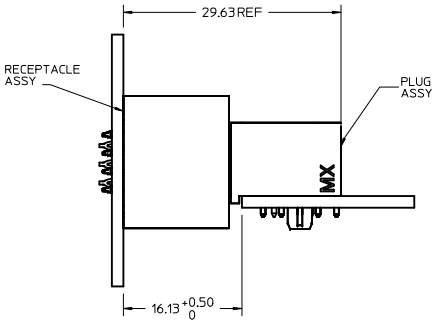

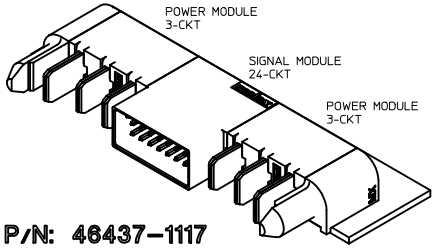

P/N: 46437-1117

NOTES:

1. MATERIAL:
   - -HOUSINGS: LCP UL94 V-0, COLOR: BLACK.
   - -TERMINALS: COPPER ALLOY.
   - -PLATING: 0.000127 NICKEL OVERALL WITH 0.00254 SELECTIVE MATTE TIN ON TAILS. AND 0.000762 SELECTIVE GOLD ON CONTACT AREA.
2. PACKAGING ASSEMBLIES TO BE TRAY PACKED. STD. QUANTITY: TBD.
3. PC BOARD REQUIRES SOLDER THRU HOLES. REFER TO PS-46436-100 FOR DETAILS.
4. PRODUCT SPEC.: PS-46436-100.
5. APPLICATION SPEC: AS-46436-100.
6. SEE PRODUCT SPEC. FOR RoHS REQUIREMENTS.
7. ASSEMBLY MATES WITH MOLEX RECEPTACLE ASSEMBLY, P/N 46562-1117.

PRELIMINARY EC NO: UCP2010-2269 DRWN:BKOSTIC 2010/03/23 CHKD: 2010/04/29 APPR:APATEL 2010/04/29	QUALITY SYMBOLS	GENERAL TOLERANCES (UNLESS SPECIFIED)	DIMENSION STYLE: MM ONLY	SCALE: 3:1	DESIGN UNITS: METRIC	THIRD ANGLE PROJECTION
		mm / INCH	DRAWN BY: BKOSTIC DATE: 2010/03/23	TITLE: RA PLUG ASSY 3P-24S-3P TEN60 POWER FAMILY		
		4 PLACES ± --- ± ---	CHECKED BY DATE			
		3 PLACES ± --- ± ---				
		2 PLACES ± 0.13 ± ---	APPROVED BY: APATEL DATE: 2010/04/29	molex MOLEX INCORPORATED		
		1 PLACE ± 0.25 ± ---				
		ANGULAR ±1/2°	MATERIAL NO.: 46437-1117	DOCUMENT NO.: SD-46437-1117	SHEET NO.: 1 OF 1	
REV: 1	DESCRIPTION	DRAFT WHERE APPLICABLE MUST REMAIN WITHIN DIMENSIONS	SIZE: D	THIS DRAWING CONTAINS INFORMATION THAT IS PROPRIETARY TO MOLEX INCORPORATED AND SHOULD NOT BE USED WITHOUT WRITTEN PERMISSION		

tb_frame_D_P_AM_T
Rev. E 2006/04/15