PART NUMBER	REV	FIRST USED
1385777-1	H	122500-1
1385777-2	H	565435-5
1385777-3	H	354500-1

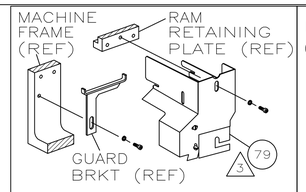

AMP-O-LECTRIC TM TERM GUARD

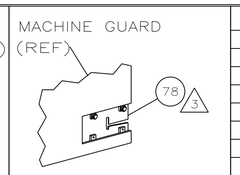

G TERMINATOR GUARD

TERMINAL NAME: WIRE TO BOARD SOCKET

440147
1734193

JST TERMINAL CUSTOMER CRIMP SPECS

PAD LTR	CRIMP HEIGHT	WIRE SIZE
A	.021 ±.001 [0.53 ±0.03mm]	0.08mm²
B	.020 ±.001 [0.51 ±0.03mm]	0.05mm²
C	.019 ±.001 [0.48 ±0.03mm]	0.03mm²
D	NOT	USED

CRIMP	SIZE	TYPE	RANGE
WIRE	.031 [0.8mm]	F	0.03-0.08mm²
INSUL	.031 [0.8mm]	F	ϕ 0.9-1.0mm

WIRE STRIP LENGTH	TERM APPL SPEC	FEED	APPL INSTRUCTION	SET UP GAGE	LAYOUT
.035-.051	114-57016	.157	408-8040	458637-1	L3000

USED ON —

-1	LEADMAKER	AIRFEED
-2	BENCH MODEL K	AIRFEED
-3	BENCH MODEL G	AIRFEED

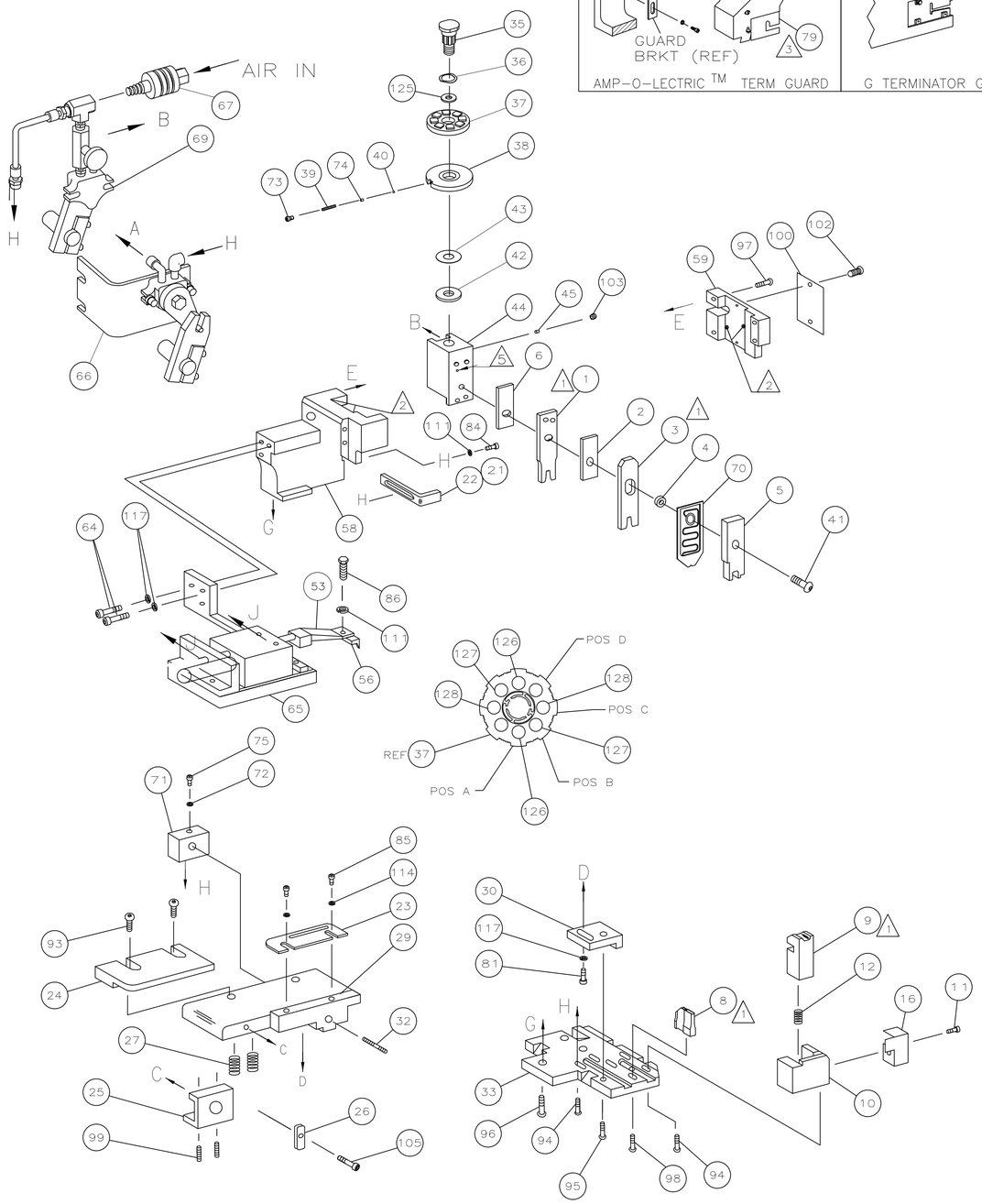

						129
2	2	2	–	4-354779-2	PIN, WIRE DISC (.3200)C	128
2	2	2	–	4-354779-0	PIN, WIRE DISC (.3190)B	127
2	2	2	–	3-354779-8	PIN, WIRE DISC (.3180)A	126
1	1	1	–	986950-1	WASHER, FLAT PRECISION	125
1	1	1	–	217238-1	GENERAL INSTRUCTION PACKAGE	124
1	1	1	–	4088040	SF APPL INST 408-8040	123
						122
1	1	1	–	4-21028-0	PIN,SLT SPR(ϕ.093x.75)ST GDE PL	121
						120
						119
						118
3	3	3	–	21024-5	WASHER, LOCK(#10)ADJ BLOCK	117
						116
						115
2	2	2	–	21024-2	WASHER,LOCK(#4)FRONT STP GUIDE	114
						113
						112
2	2	2	–	21024-4	WASHER,LOCK(#8)STRIPPER	111
						110
						109
						108
						107
						106
1	1	1	–	22353-8	SCR, SHLD (Ø187x.25) DRAG LEVER	105
						104
1	1	1	–	21009-2	SCR,SKT SET(1/4-20x.25 LW)RAM	103
2	2	2	–	21017-2	SCR,DRIVE(#2x.19)ID PLATE	102
						101
1	1	1	–	461264-1	PLATE, IDENTIFICATION	100
2	2	2	–	5-21006-6	SCR,SET(10-32x.75)DRAG	99
1	1	1	–	22733-8	SCR,BHC(8-32x.38 LW)ANVIL	98
4	4	4	–	2-21002-9	SCR,BHC(10-32x.75)CAP	97
3	3	3	–	2-22733-8	SCR,BHC(1/4-20x.62)HSG	96
1	1	1	–	2-21002-7	SCR,BHC(10-32x.50)SG ADJ BLK	95
6	6	6	–	2-21002-2	SCR,BHC(8-32x.50)TERM H DWN	94
2	2	2	–	2-21002-1	SCR,BHC(8-32x.50)R STP GDE	93
						92
						91
						90
						89
						88
						87
1	1	1	–	2-22603-1	SCR,HEX HD(8-32x.38)FEED FINGER	86
2	2	2	–	1-21000-3	SCR,SHC(4-40x.25)FR ST GUIDE	85
1	1	1	–	2-21000-7	SCR,SHC(8-32x.50)STRIPPER	84
						83
						82
1	1	1	–	3-21000-4	SCR,SHC(10-32x.38)SG ADJ BL	81
						80
–	1	–	–	462992-7	GUARD ASSY	79
REF	–	–	–	679532-1	INSERT, GUARD	78
						77
						76
1	1	1	–	2-21008-9	SCR, SKT SET (6-32x.25)	75
1	1	1	–	690603-1	SPRING, ASSIST	74
1	1	1	–	23030-1	SCR,SHC(6-32x.25 SL)INS DISC	73
1	1	1	–	690191-5	PLUG, NYLON	72
1	1	1	–	1633020-1	FINE ADJUST SCREW BLOCK	71
-3	-2	-1	U/M	PART NO	DESCRIPTION	ITEM NO

QTY REQD PER ASSY — PARTS LIST

	1	1	1	–	1-2119791-4	DEPRESSOR, WIRE	70
4	–	1	–	–	455350-1	AIR BLAST ASSEMBLY	69
							68
	–	REF	–	–	24042-2	VALVE, SHUT OFF	67
	–	1	–	–	692655-1	AIR FEED VALVE ASSY	66
4	1	1	1	–	1633030-1	AIR FEED ASSEMBLY	65
	2	2	2	–	3-21000-7	SCR,SHC(10-32x.75)AIR ASSY	64
	2	1	2	–	980285-2	ELBOW, SWIVEL 1/8 NPT - 1/4 T	63
	2	–	2	–	23238-1	QUICK DISCONNECT	62
	48.00	21.00	48.00	IN	27319-4	TUBING, POLY-FLO ϕ.25	61
							60
	1	1	1	–	454220-8	CAP, RAM	59
	1	1	1	–	454485-7	HOUSING	58
							57
	1	1	1	–	4-694433-8	PAWL, FEED	56
							55
							54
4	1	1	1	–	461062-2	FEED FINGER ASSY	53
							52
							51
	1	–	1	–	23054-1	FLOW CONTROL	50
	1	–	1	–	22306-3	ELBOW, STREET 90°	49
							48
	1	–	1	–	22304-1	NIPPLE, HEX 1/8 NPT	47
							46
	1	1	1	–	690191-1	PLUG, NYLON	45
	1	1	1	–	455673-6	RAM	44
	1	1	1	–	690125-1	WASHER, LAMINATED	43
	1	1	1	–	690124-4	WASHER, RAM	42
	1	1	1	–	7-21002-9	BOLT, CRIMPER(5/16x1.00)	41
	1	1	1	–	23241-6	BALL, STEEL	40
	1	1	1	–	690170-1	SPRING, COMPRESSION	39
	1	1	1	–	690142-2	DISC, INSULATION	38
	1	1	1	–	354777-1	WIRE DISC, PLASTIC	37
	1	1	1	–	22480-5	WASHER, SPRING	36
	1	1	1	–	690212-1	POST, RAM	35
							34
	1	1	1	–	1633017-1	PLATE, BASE	33
	1	1	1	–	1633031-1	SCREW, ADJUSTMENT	32
							31
	1	1	1	–	1633014-1	BLOCK, STRIP GUIDE ADJ	30
	1	1	1	–	1633016-1	PLATE, STRIP GUIDE	29
							28
	2	2	2	–	22281-8	SPRING, DRAG	27
	1	1	1	–	240793-1	LEVER, DRAG RELEASE	26
	1	1	1	–	240792-1	DRAG, TERMINAL	25
	1	1	1	–	1633013-1	GUIDE, STRIP (REAR)	24
	1	1	1	–	1633015-1	GUIDE, STRIP (FRONT)	23
	1	1	–	–	1-1338987-7	STRIPPER	22
	–	–	1	–	690472-2	STRIPPER	21
							20
							19
							18
							17
	1	1	1	–	318563-1	GUARD, CHIP, FRONT	16
							15
							14
							13
	1	1	1	–	3-22280-3	SPRING, SHEAR	12
	1	1	1	–	690461-7	STOP, SHEAR	11
	1	1	1	–	1-690459-0	HOLDER, SHEAR (FRONT)	10
1	1	1	1	–	1803095-3	SHEAR, FLOAT (FRONT)	9
	1	1	1	–	1-904991-5	ANVIL	8
							7
	1	1	1	–	2-455888-3	SPACER, CRIMPER	6
	1	1	1	–	2-455889-9	DEPRESSOR, SHEAR	5
	1	1	1	–	1-238011-6	SPACER, BLOCK CRIMPER	4
1	1	1	1	–	1633712-6	CRIMPER, INSULATION	3
	1	1	1	–	455888-2	SPACER, CRIMPER	2
1	1	1	1	–	1633730-6	CRIMPER, WIRE	1
	-3	-2	-1	U/M	PART NO	DESCRIPTION	ITEM NO

QTY REQD PER ASSY — PARTS LIST

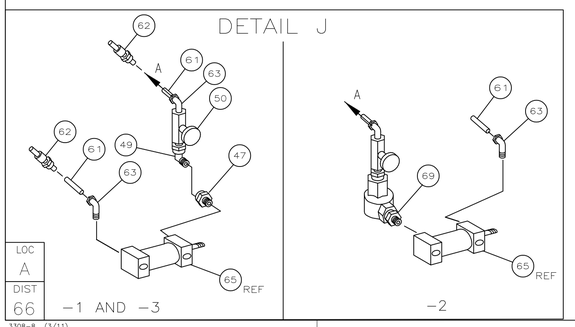

1. RECOMMENDED SPARE PARTS.
2. GREASE LIGHTLY.
3. GUARD MUST BE IN PLACE WHEN OPERATING APPLICATOR IN A BENCH MACHINE.
4. SEE DRAWING FOR COMPONENTS
5. REMOVE PIN AT ASSY

P	LTR	REVISION RECORD	DATE	DWN	APVD
	H	ECR-15-018778	12/31/2015	KH	GB

DIMENSIONS: INCHES

TOLERANCES UNLESS OTHERWISE SPECIFIED:
0 PLC ± –
1 PLC ± –
2 PLC ± –
3 PLC ± –
4 PLC ± –
ANGLES ± –
SURFACE TEXTURE √

DWN C.ERISMAN	28JUN04	MATERIAL – –	HEAT TREAT – –
CHK –	–		
APVD T.ELBIN	28JUN04	TE Connectivity	
NAME SIDE FEED HDM APPLICATOR			
SCALE –	SIZE A1	DRAWING NO 1385777	SHEET 1 OF 1 REV H

CUSTOMER ACCESSIBLE PRODUCTION DRAWING

THIS DRAWING IS A CONTROLLED DOCUMENT. DWG NO 1385777

THIS INFORMATION IS CONFIDENTIAL AND PROPRIETARY TO TYCO ELECTRONICS CORPORATION AND ITS WORLDWIDE SUBSIDIARIES AND MAY NOT BE REPRODUCED OR DISCLOSED TO ANYONE OUTSIDE THE PERSONS WITH ALL RIGHTS THAN TE PERSONNEL, WITHOUT AUTHORIZATION FROM TE (www.TE.com).

LOC A
DIST 66

3308-8 (3/11)