Crystal Units
Surface Mount Type CX3225GA

KYOCERA

3.2×2.5mm for Automotive

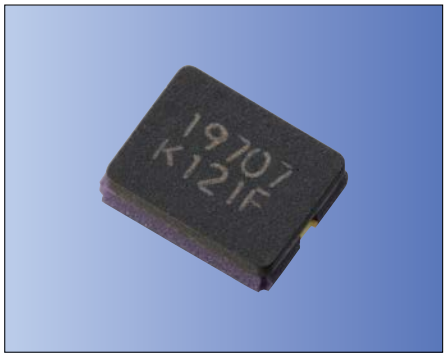

RoHS Compliant

Features

- Crystal unit for automotive electronics
- Improved solderability
- Small and low profile (3.2×2.5×0.85mm)
- Ceramic package
- Reflow compatible
- Acceptable heat cycle solder junction for 3000 cycle (–40 to +125°C)
- AEC-Q200 qualified

Applications

- ECU
- TPMS
- High-Speed Automotive Network

How to Order

CX3225GA 16000 □□ □ □ □ □□

① ② ③ ④ ⑤ ⑥ ⑦

① Series ② Frequency

③ Load Capacitance ④ Frequency Tolerance

D0	8 pF	P	$\pm 50\times10^{-6}$

⑤ Operating Temp. Range ⑥ Frequency Temp. Stability

TV	–40 to +150°C	$\pm 150\times10^{-6}$

⑦ Individual Specification

Packaging (Tape & Reel 3000 pcs./ reel)

Specifications

Item	Symbol	Specification	Units	Remarks
Frequency Range	f_{nom}	8000 to 54000	kHz	
Overtone Order	OT	Fundamental	—	
Load Capacitance	CL	8	pF	Please contact us for other Load Capacitance.
Frequency Tolerance	f_{tol}	±50	$\times10^{-6}$	25°C±3°C
Motional Series Resistance	R1	Table 1	ohm	
Drive Level	DL	Table 2	µW	
Operating Temp. Range	T_{use}	–40 to +150	°C	
Storage Temp. Range	T_{stg}	–40 to +150	°C	
Frequency Temp. Characteristics	f_{tem}	±150	$\times10^{-6}$	Freq. deviation from the value at 25°C

Please contact us for other specifications.

Table1 Motional Series Resistance

Frequency Range	Motional Series Resistance
8000≤f_{nom}< 9800kHz	500Ω max.
9800≤f_{nom}<13560kHz	200Ω max.
13560≤f_{nom}<16000kHz	120Ω max.
16000≤f_{nom}≤54000kHz	100Ω max.

Table2 Level of Drive

Frequency Range	Level of Drive
8000≤f_{nom}≤54000kHz	10µW (200µW max.)

Dimensions

(Unit: mm)

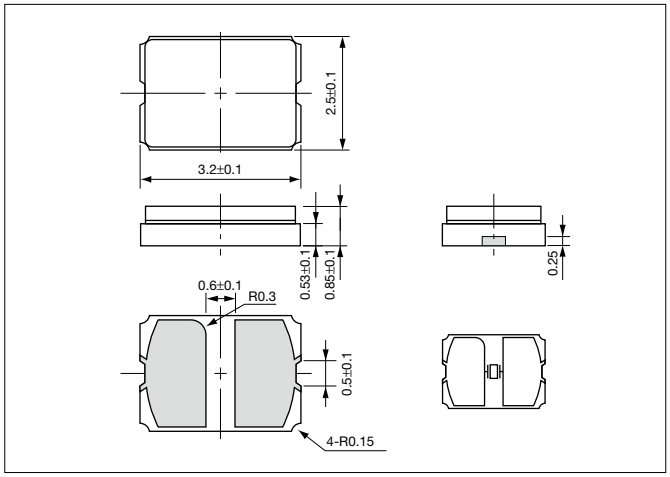

Recommended Land Pattern
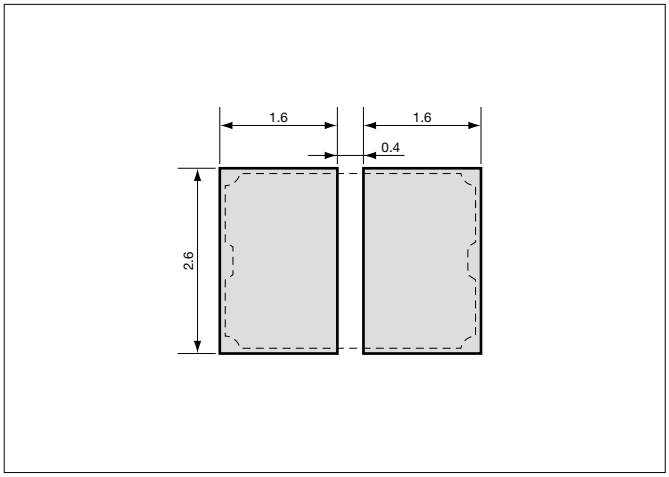
(Unit: mm)