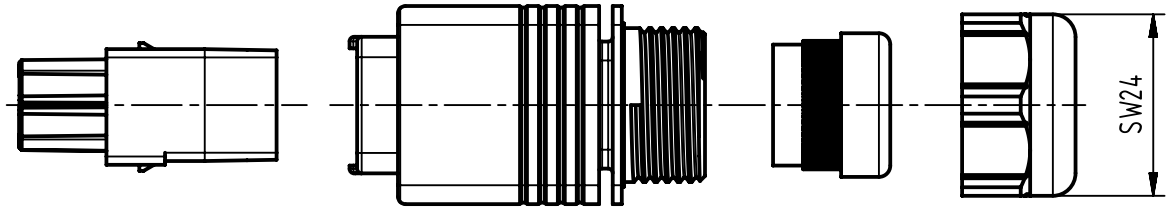

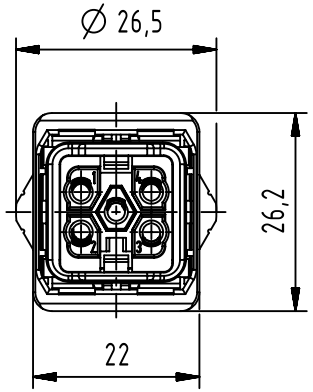

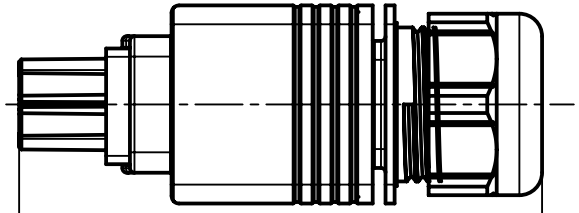

Gesamtlänge montiert ca. 70,5
complete length assembled ca. 70.5

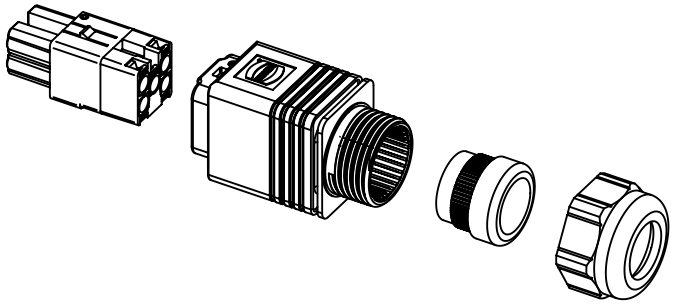

Querschnitt / *cross section*: 0,5mm²-2,5mm²

All Dimensions in mm Original Size DIN A4	Scale 1:1	Free size tol.		Ref. Sub. TB 09352321423 500000058722 2013-02-06	
All rights reserved Department EC PD - DE	Created by ELLERMANN	Inspected by DAHMS	Standardisation HOFFMANN	Date 2013-06-12	State Final Release
HARTING Electronics GmbH D-32339 Espelkamp	Title Han PP Power plug plastic QL AWG20-14				Doc-Key / ECM-Nr. 100185745/UGD/002/C 500000062511
	Type TB	Number 09352320423		Rev. C	Page 1/1

A4