BUD	PART NAME	NEMA DIE CAST ALUM. ENCLOSURE W/MTG. BRKT	PART No.	AN-2811-A & AN-2811-AB	REVISION DATE	9-30-15

UL LISTED FOR U.S. AND CANADA - FILE #E194432

TYPE RATING 4, 4X, 6, 6P, 12 AND 13, COMPARE TO IP-68

80°C. MAXIMUM OPERATING TEMPERATURE

UPDATE REPLACES PART NO. AN-2811 & AN-2811-B

DRAWING FOR REFERENCE

WE RESERVE THE RIGHT TO MAKE CHANGES TO OUR STANDARD PRODUCTS. PLEASE CONSULT WITH BUD INDUSTRIES PRIOR TO USING THIS DRAWING FOR DESIGN PURPOSE.

BODY

COVER NOT SHOWN

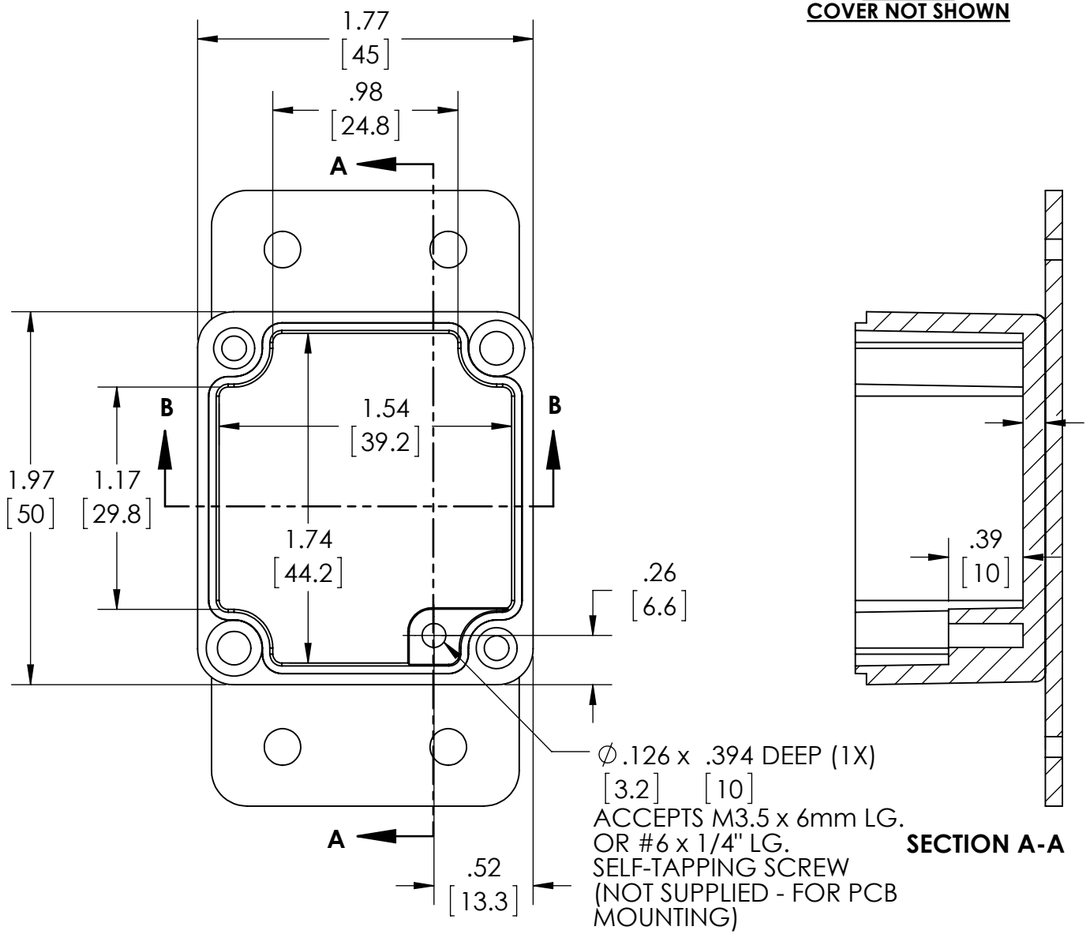

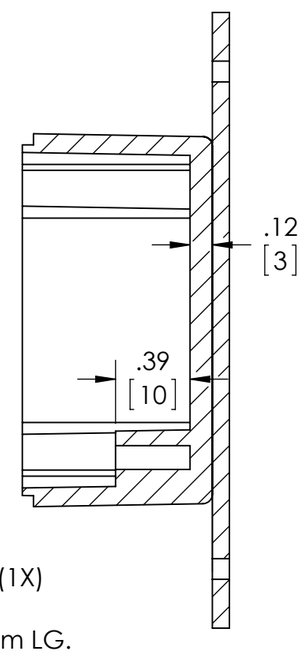

SECTION A-A

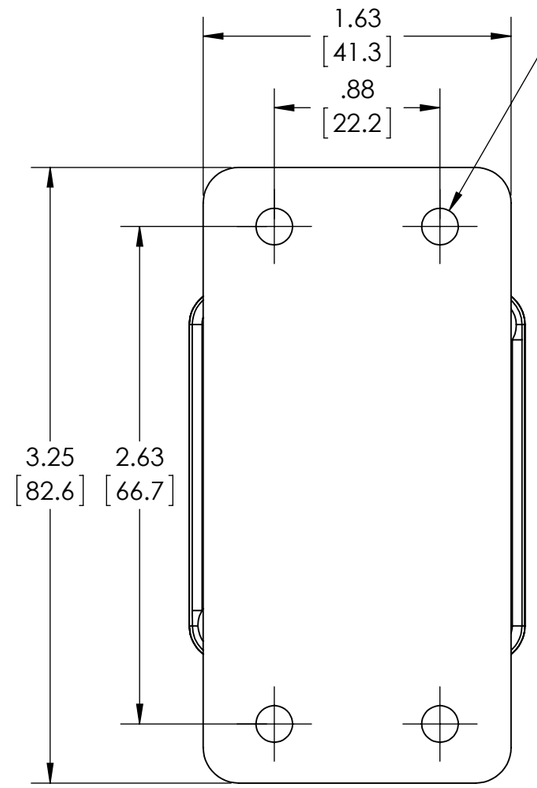

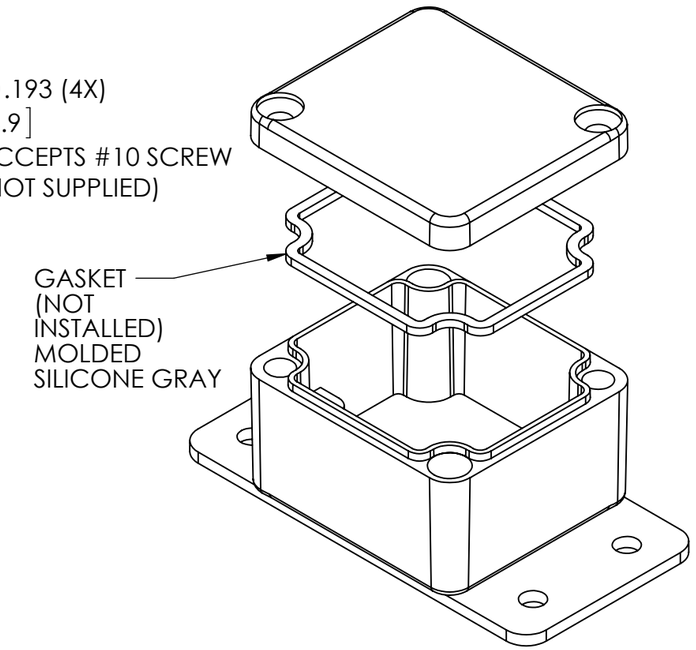

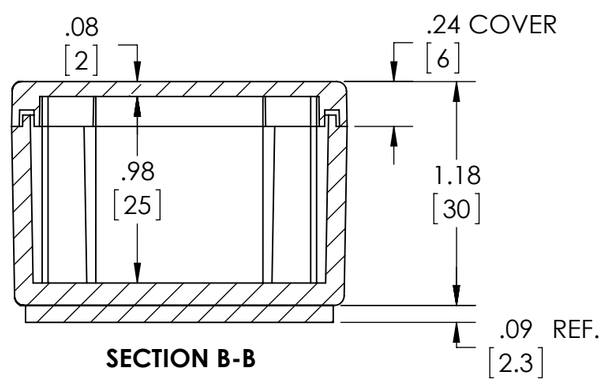

SECTION B-B

MATERIAL: BODY & COVER - ALUMINUM ALLOY #ADC-12
MOUNTING BRACKET - .09 THK. ALUMINUM (3003-H14)

FINISH: NATURAL (SUFFIX -A)
SMOOTH BLACK POWDERCOAT (SUFFIX -AB)

FOUR (4) M4x0.7 x 20mm (.79") LG. 90°CSK. HEAD STAINLESS STEEL SCREWS SUPPLIED FOR ASSEMBLY OF COVER TO BODY. APPLY AT 12 IN./LB. OF TORQUE.

OUTSIDE AND INSIDE DRAFT ANGLE: 1°
DIMENSIONS ARE INCH[MM]

OPTIONAL ACCESSORIES:
PCB MOUNTING KIT #57-58
INTERNAL PANEL #ANX-91311
REPLACEMENT GASKET #1311GSKTSC

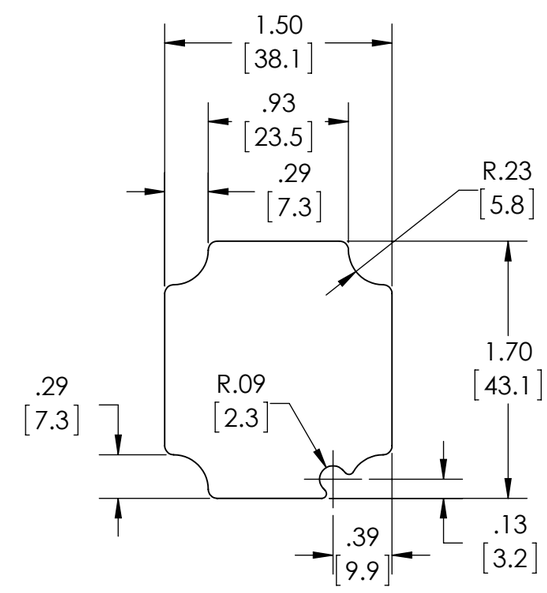

OPTIONAL INTERNAL PANEL AND SUGGESTED PC BOARD LAYOUT