Part Number: 130098-0033

Status: Active

Overview: Strain-Relief Cord Grips

Description: MAX-LOC® Strain Relief Cord-Sealing Grip, 3/8" NPT, 90° Angle Male, Cable Diameter 7.93-9.53mm (.312-.375")

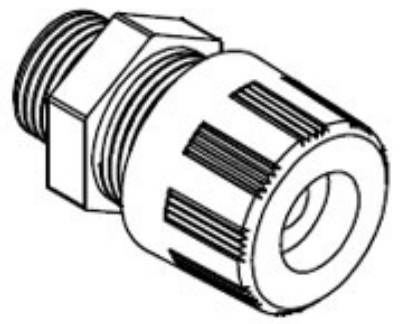

Series

image - Reference only

Documents:
RoHS Certificate of Compliance (PDF) Product Literature (PDF)

Agency Certification

CSA	LR32159
UL	E76954

General

Product Family	Cable Grips
Series	130098
Eye Type	N/A
Insulated	No
O-Ring	No
Overview	Strain-Relief Cord Grips
Product Literature Order No	987650-8064
Product Name	MAX-LOC®
Type	Strain Relief Grip
UPC	78678872153
Woodhead	Yes

Physical

Approximate Break Strength	N/A
Bale Length	N/A
Body Style	90° Angle
Cable Diameter	7.93-9.53mm (.312-.375")
Color - Grommet	N/A
Gender	Male
Material - Body	Nylon
Material - Grip	N/A
Mesh Length	N/A
Net Weight	2.720/kg
Number of Holes	N/A
Thread Size	3/8" NPT

Material Info

Old Part Number	5507

EU RoHS
ELV and RoHS Compliant
REACH SVHC
Not Reviewed
Low-Halogen Status
Not Reviewed

China RoHS

Need more information on product environmental compliance?

Email productcompliance@molex.com
For a multiple part number RoHS Certificate of Compliance, click here

Please visit the Contact Us section for any non-product compliance questions.

Search Parts in this Series
130098Series