Alle Rechte vorbehalten/ *All rights reserved*

Mating face according to : MIL-C-24308 / DIN 41652 / CECC 75301-802

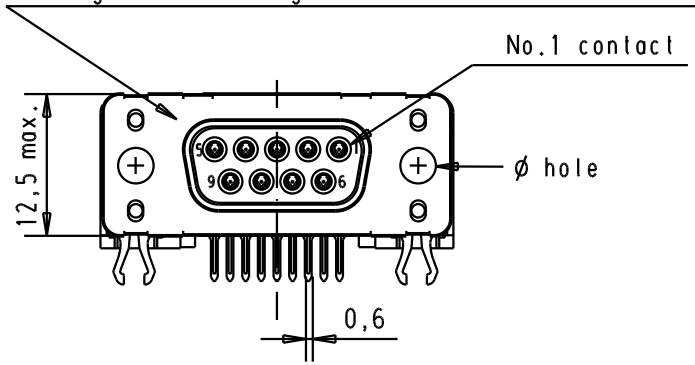

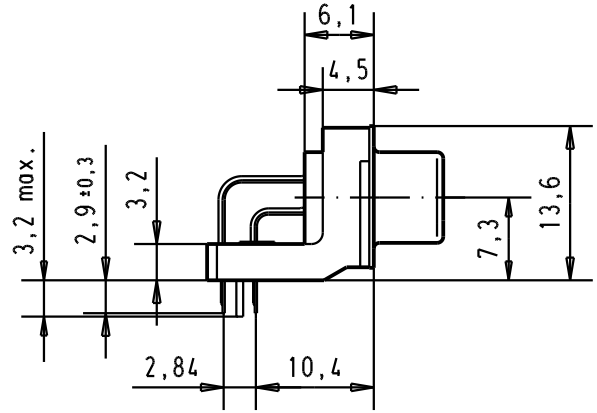

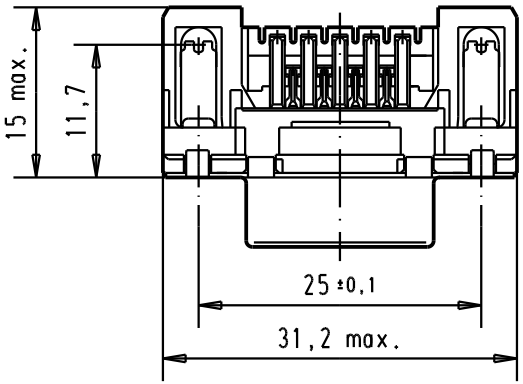

Printed board layout
component side

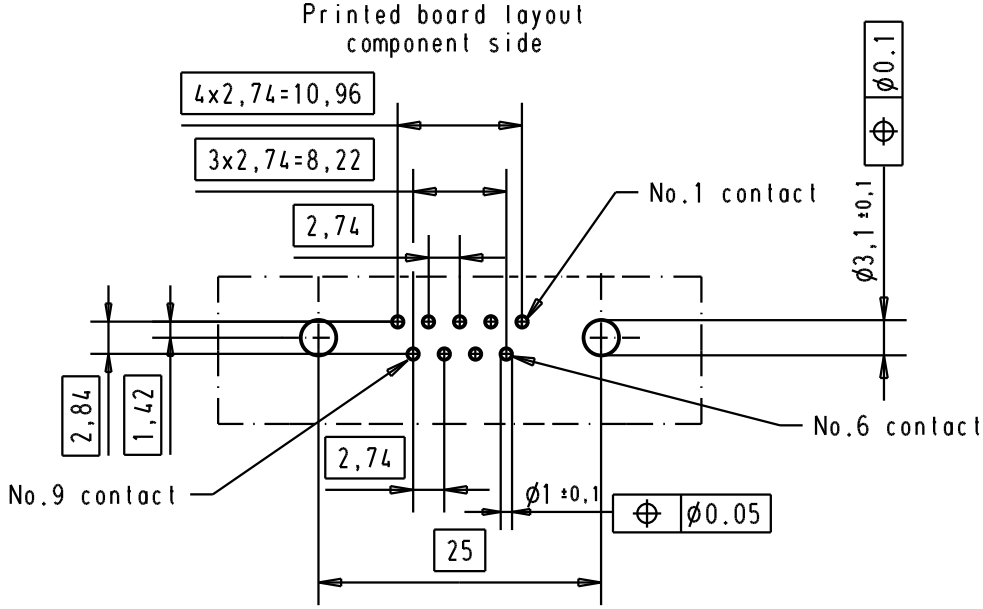

Connector retention and insertion forces on the PCB = 25 / 80 newtons

09 66 157 3610	3,1 ± 0,1	1			
09 66 157 6610	3,1 ± 0,1	2	31892	05/05/04	JH
09 66 157 7610	3,1 ± 0,1	3	29723	05/03/02	CV
Part number	ø hole	Performance level	Mod.	Dat.	Name

	Dat.	Name
Detail.	05/03/02	CV
Insp.		
Stand.		

All Dim. in mm
Orig. Size DIN A 4

D-Sub,high temperature,
female, standard, 9 poles,
with solder pins 2,9 mm, holes
and grounding board lock.

Maßstab/ *Scale* 1.5:1

HARTING EURL
F-95972 Paris

TB 0966157x61x

Sub.

Blatt/ *Page* 1