Commercial Tolerance	Sym.	Date	Revision	Signed	Che
±0.3	△				
	△				
	△				

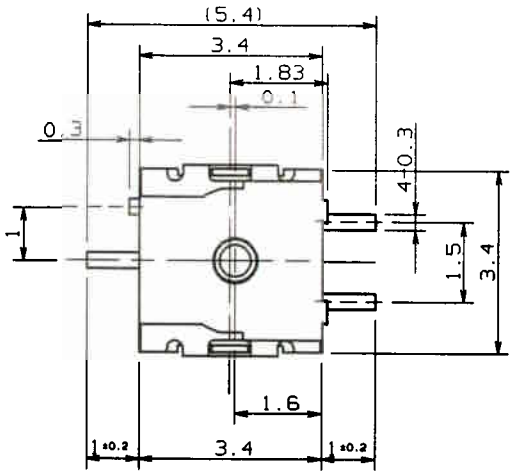

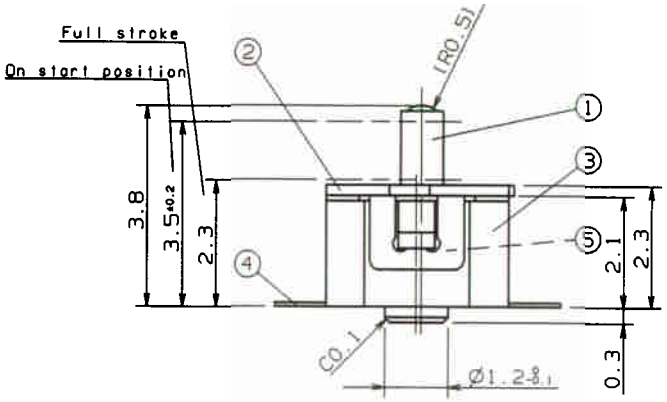

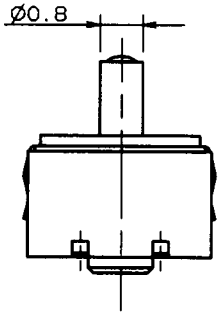

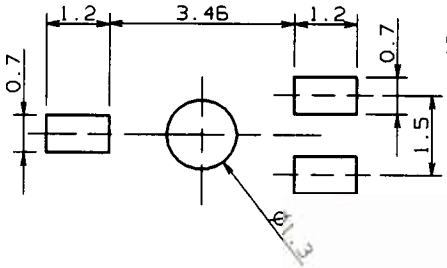

Printed circuit pattern (Tolerance ±0.05)

-Parts list-

No.	Part name	Material	Remarks
1	Lever	PPHS Resin (Dark brown color)	94V-0
2	Cover	PPHS Resin (Dark brown color)	94V-0
		Stainless steel	
3	Case	PPHS Resin (Dark brown color)	94V-0
4	Terminal	Phosphor Bronze	Silver plating
5	Contact piece	Copper Alloy	Silver plating

FOR REFERENCE PURPOSE ONLY
MAR 12. 1997
MATSUSHITA ELECTRONIC COMPONENTS CO.,LTD

Specification

Common specification ESE2100 TYPE(1) (CE-151-ESE-2100-1) shall apply
(Except for the following items)

□ Circuit 1P1T(N.O.)

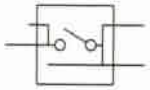

Specification of Taping Package

Common specification "Emboss taping" (151-SW-0039-2) shall apply.
(Except for the following items)

3-1 Dimensions

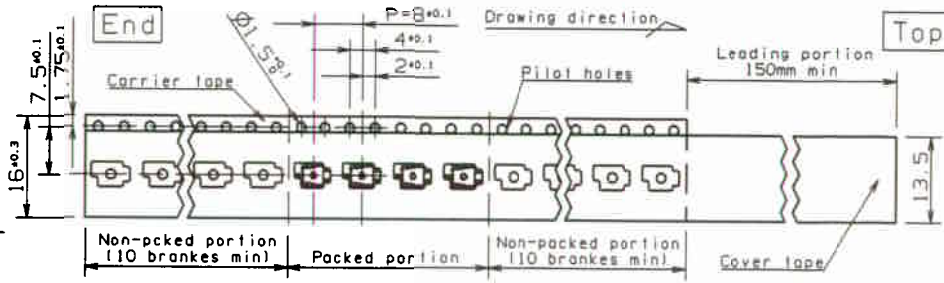

Standard Packaging Q'ty / 2,000pcs

Estd. Date	'95. 4.19				
Enfo. Date					
Scale	Designed	Drawn	Traced	Checked	Checked
10/1	K.Yosufuku '95. 4.19	K.Yosufuku '95. 5. 8		M.Tsuchimoto	T.Mihara

Individual Specifications	Customer	Standard
Name	Detector Switch ESE2101BT	
No.	151-ESE-2101BT	(R00)
PRT-NM	sw-151e-ese2101bt-std-r*	

A3 3rd Angle System Unit : mm MATSUSHITA ELECTRONIC COMPONENTS CO.,LTD. ELECTROMECHANICAL COMPONENTS DIV.